AXIM ARCHITECTURAL HARDWARE	TITLE **CONCEALED ROD FULL WIDTH SOFT TOUCH BAR PR-7200 SERIES**	SHEET No. **4:39**
	SUB TITLE **ASSEMBLY DETAILS**	

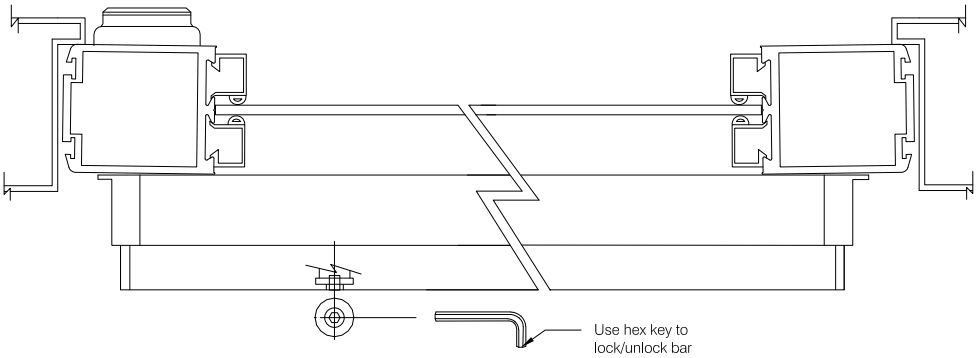

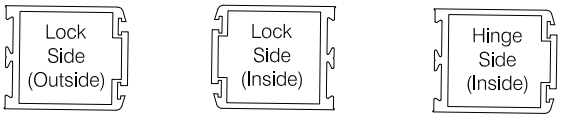

HANDLE OPTION

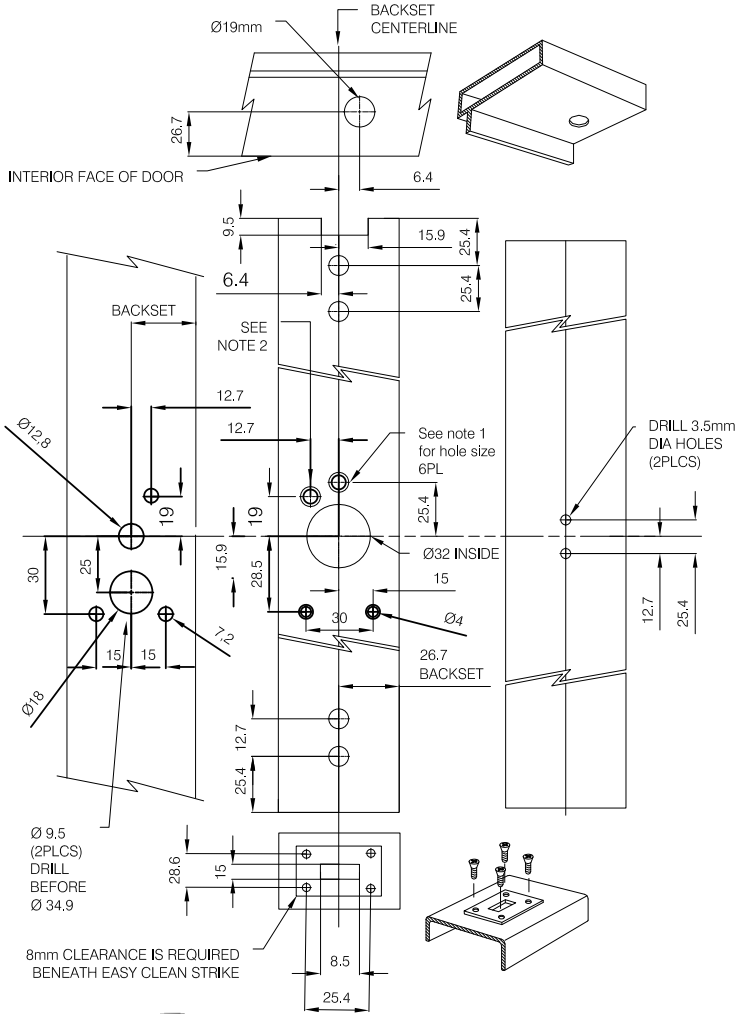

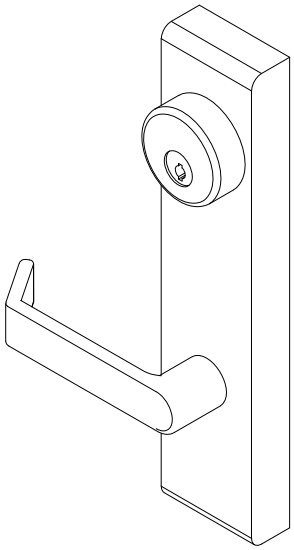

OUTSIDE CYLINDER PREPARATION

NOTE 2:
WHEN USING OUTSIDE CYLINDER, DRILL 5.5mm, HOLES FOR #10-32 SCREWS BOTH SIDES AND COUNTERSINK INTERIOR ONLY .

1. DRILL Ø5.5mm AND COUNTERSINK 5 HOLES FOR #10.32 FLAT HEAD SCREWS
2. THESE DIMENSIONS AND TEMPLATES ASSUME DOOR 44.5mm THINK WITH 3mm STILE WALL

The Parkside Group Ltd

The Willow Centre
17 Willow Lane, Mitcham, Surrey, CR4 4NX
Tel: 020-8685 9685 Fax: 020-8646 5096
Email: axim@parksidegroup.co.uk
Web Site: www.axim.co.uk

SCALE	NTS @A4
DATE	SEPTEMBER 2023

For scaled technical or CAD drawings, please contact AXIM.