AXIM ARCHITECTURAL HARDWARE	TITLE **EXTRUDED ALUMINIUM PAD HANDLE SET HD-92 SERIES**	SHEET No. **6:06**
	SUB TITLE **300mm PULL HANDLE WITH 110mm SPACED HOLES HD-092**	

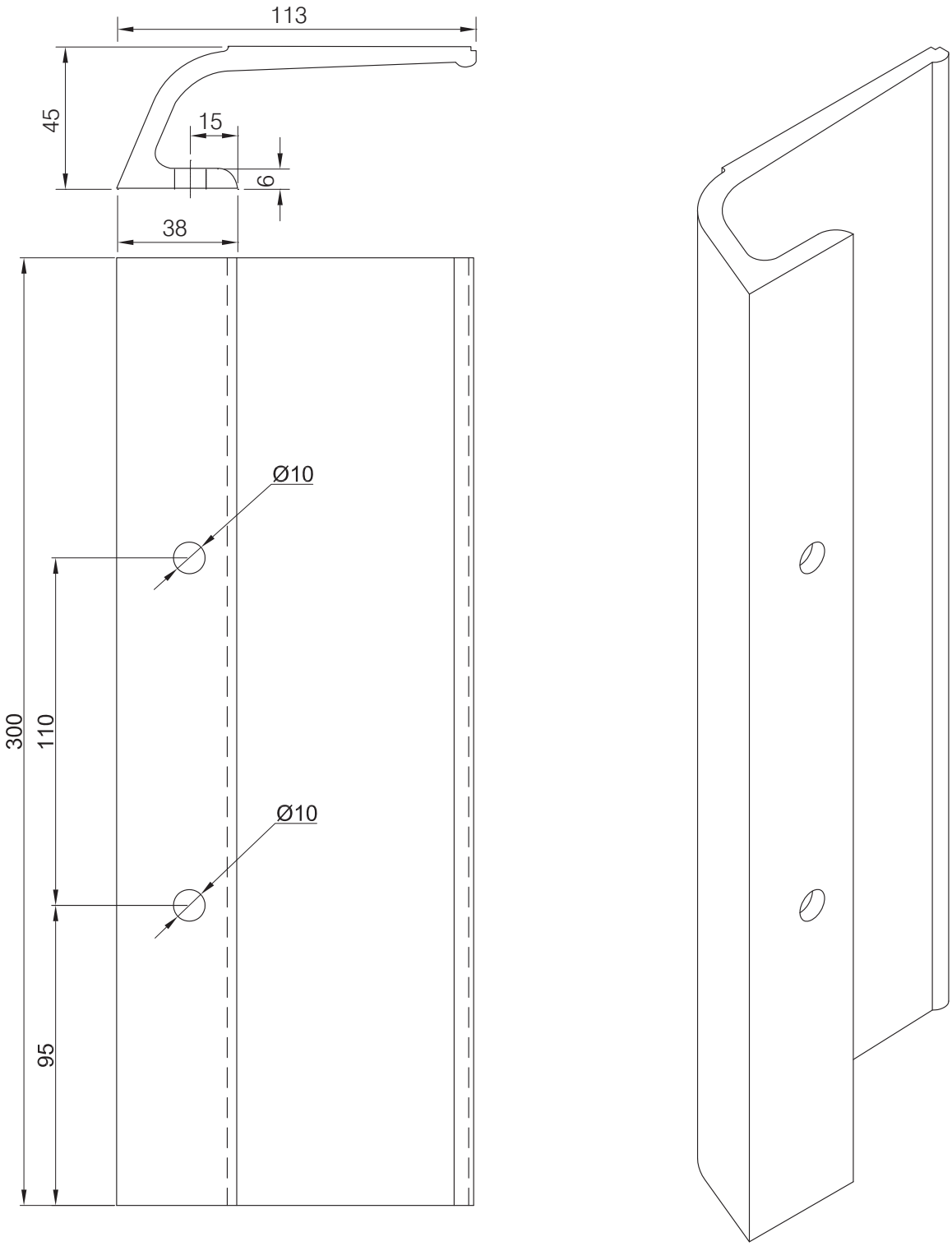

The Parkside Group Ltd

The Willow Centre
17 Willow Lane, Mitcham, Surrey, CR4 4NX
Tel: 020-8685 9685 Fax: 020-8646 5096
Email: axim@parksidegroup.co.uk
Web Site: www.axim.co.uk

SCALE	NTS @A4
DATE	JULY 2017

For scaled technical or CAD drawings, please contact AXIM.